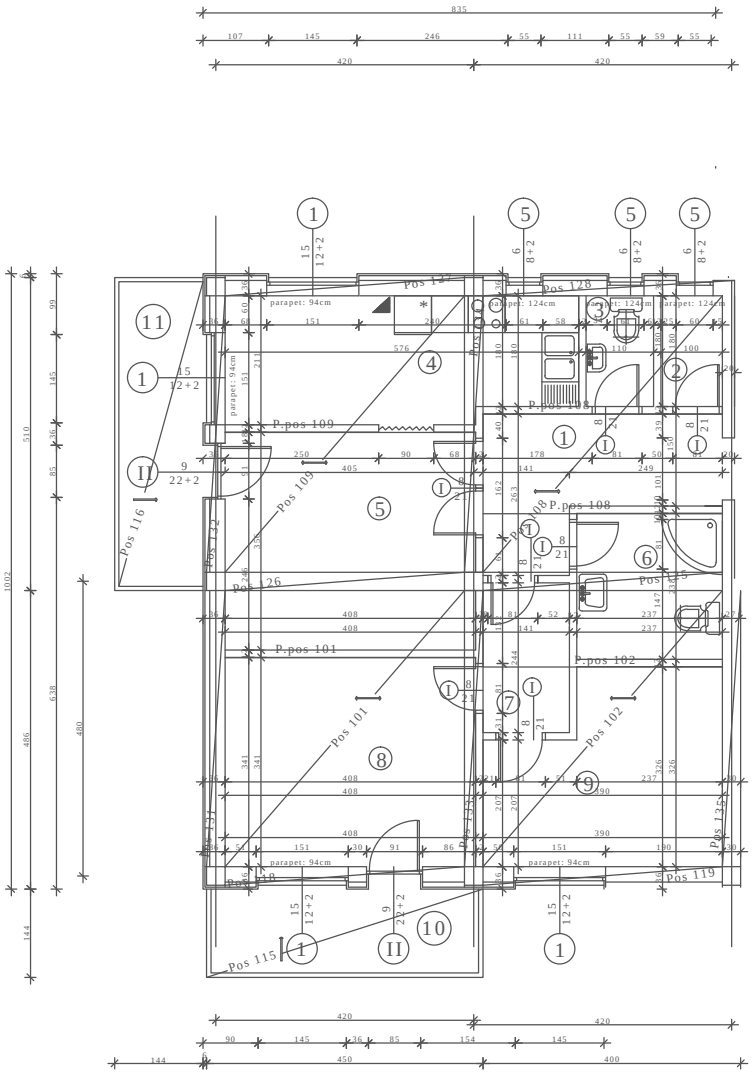-Osnova stana
-Marija Blagojevic 120/2013